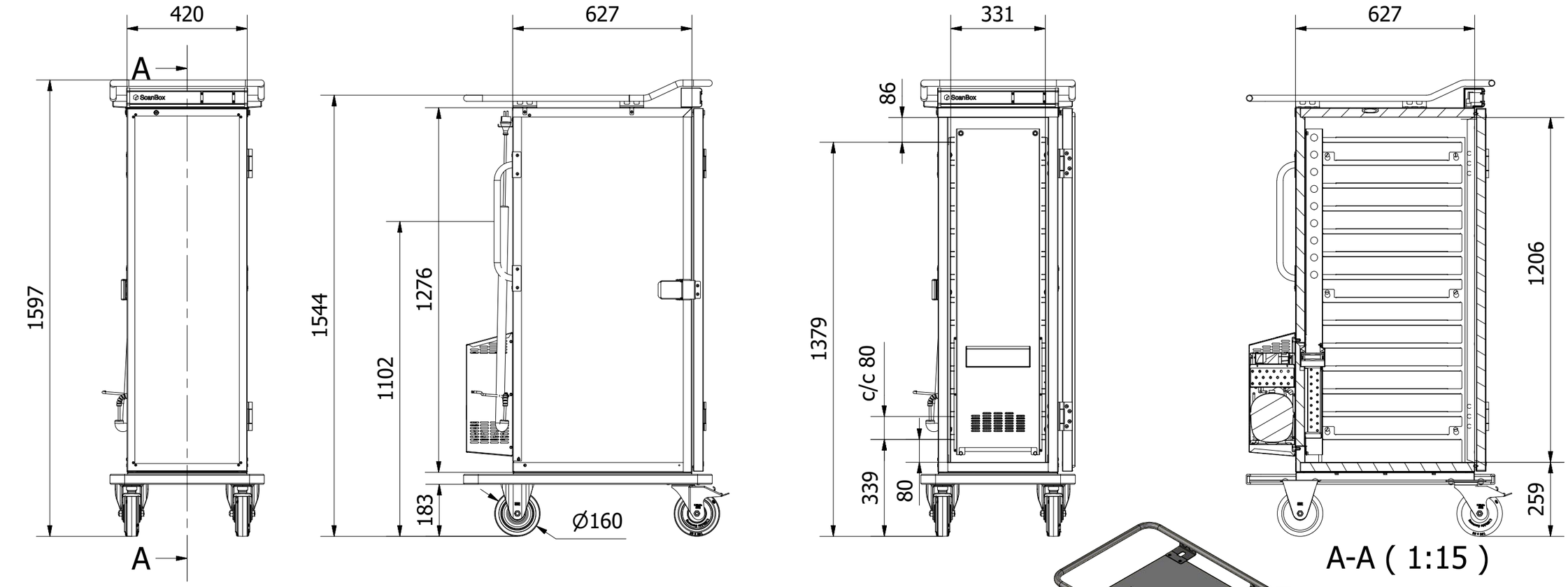

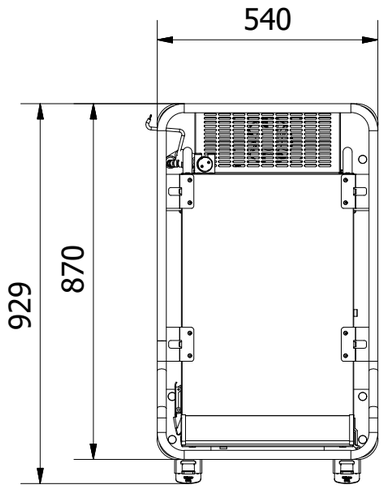

Denna ritning är Scanboxs egendom och får ej utan vårt skriftliga medgivande ändras, kopieras eller delges annan firma eller person.

This drawing is the property od ScanBox and shall not without our written consent in any way be altered, copied or communicated to any other company or person.

Tol. unless noted: ISO 2768-cL. Sharp edges broken	Designed by BL	Approved by	Date	Material	Date 2020-11-17 / Scale 1:15
ScanBox	Description Ergo Line CC14				Costumer part nr
	Drawing nr / Art.nr. ELSCC14AA0E1R1SA				Revision 000 / Sheet 1 / 1

A3

Printed out : 2021-06-22 09:00:03 page 1